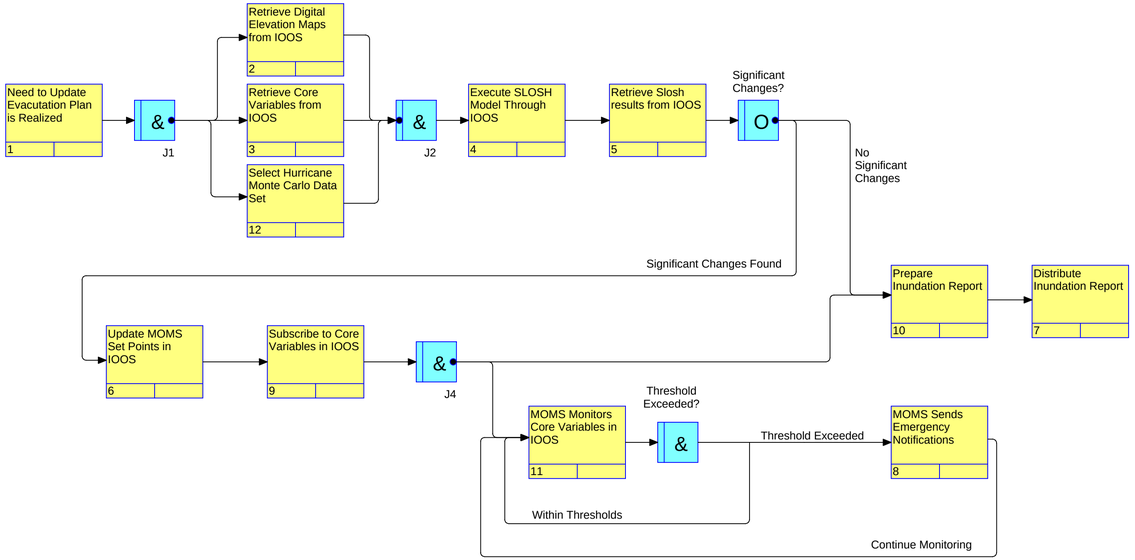
Need to Update Evacutation Plan is Realized
1
J1
Retrieve Digital Elevation Maps from IOOS
2
Retrieve Core Variables from IOOS
3
Select Hurricane Monte Carlo Data Set
12
J2
Execute SLOSH Model Through IOOS
4
Retrieve Slosh results from IOOS
5
Significant Changes?
No Significant Changes
Significant Changes Found
Prepare Inundation Report
10
Distribute Inundation Report
7
Update MOMS Set Points in IOOS
6
Subscribe to Core Variables in IOOS
9
J4
MOMS Monitors Core Variables in IOOS
11
Threshold Exceeded?
Threshold Exceeded
MOMS Sends Emergency Notifications
8
Within Thresholds
Continue Monitoring